PIONEER WYS-22 Series Heat Pump Inverter Parts Diagram

System Model: WYS0009AMFI22RD
System Code: 22022010003672
Power Supply: 110~120 V, 1 Ph, 60Hz.
Indoor Unit Model: WS009AMFI22HLD
Indoor Code: 22022011004180

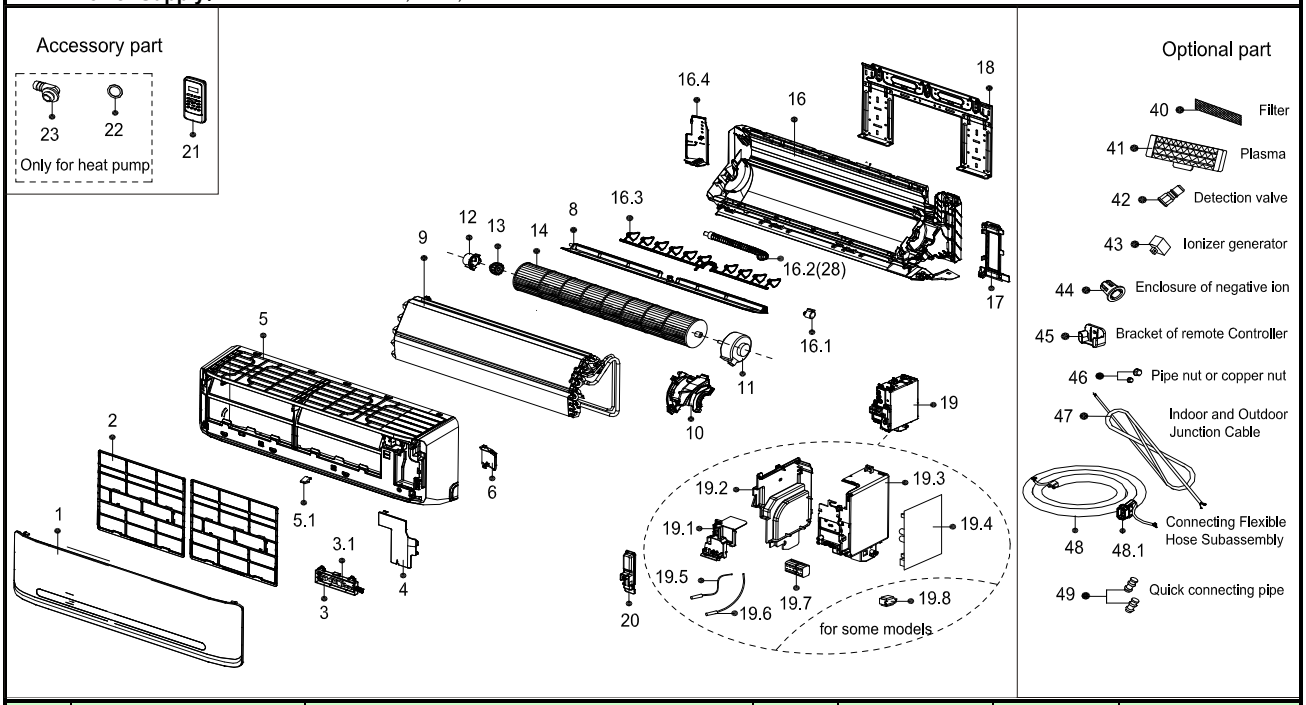

No.		Part Name	Quantity	BOM Code	BIN No.	Remark
1		Panel assembly	1.0	12122000001521	44	
2		Filter	2.0	12100204000522	0.73	
3		Indicator board assembly of Split Unit	1.0	17222000002878	1.65	
3.1		Display Panel Subassembly(Sticker)	1.0	17122000006953	1.17	
4		E-Parts Cover Plate	1.0	12122000006755	0.28	
5		frame assembly	1.0	12122000001726	6.42	
5.1		Screw Cap	1.0	12122000009477	0.02	
6		Right Cover Plate of Chassis	1.0	12122000004587	0.09	
8		Wind Guide Assembly	1.0	12122000005815	1.19	
9		Evaporator assembly	1.0	15822000003677	26.94	
10		Motor Bearing Cover	1.0	12122000005540	0.38	
11		Brushless DC Motor	1.0	11002015000031	22.25	
12		Bearing sleeve	1.0	12122000000350	0.05	
13		Bearing pedestal	1.0	12622000000006	0.13	
14		Cross-flow Window Rotor.	1.0	12100102000044	4.18	
16		Chassis assembly	1.0	12122000011818	12.92	
16.1		stepper motor	1.0	11002010000143	1.05	
16.3		Louver Assembly	1.0	12122000000038	0.43	
16.4		Left cover of chassis	1.0	12122000010098	0.12	
17		Pipe clamp board	1.0	12122000012943	0.16	
18		Installation Plate	1.0	12222000000018	1.52	
19		Electronic control box assembly	1.0	17222000009771	17.36	
19.1		Upper Cover Board of Electrical Control Box	1.0	12122000004577	0.15	
19.2		Left Side Plate of Electrical Control Box	1.0	12122000004639	0.58	
19.3		Right Side Plate of E-Parts Box	1.0	12122000004632	0.93	
19.4		Indoor main control board assembly	1.0	17122000019267	13.29	
19.5		Room Temperature Sensor	1.0	11201007000085	0.40	
19.6		Temperature Sensor	1.0	11201007000322	0.38	
19.7		Wire holder	1.0	17400401000094	0.53	
20		Electrical Control Box Cover	1.0	12122000005020	0.07	
21		Remote Controller	1.0	17317000001294	2.36	
22		Seal	1.0	12600701000039	0.02	
23		Extend Water Pipe	1.0	12100509000061	0.05	
28		Drain Hose	1.0	12100501000032	0.44	
40		Filter net of cold catalyst	1.0	12100204000685	0.09	
46		Brass Nut	1.0	15500406000010	0.42	
46		Brass Nut	1.0	15500406000016	0.26	
53		Kit of Screw Accessories	1.0	12011600000015	0.06	

PIONEER WYS-22 Series Heat Pump Inverter Parts Diagram

System Model: WYS009AMFI22RD **Outoor Unit Model:** YN009AMFI22RPD
System Code: 22022010003672 **Outdoor Code:** 22022016005179
Power Supply: 110~120 V, 1 Ph, 60Hz.

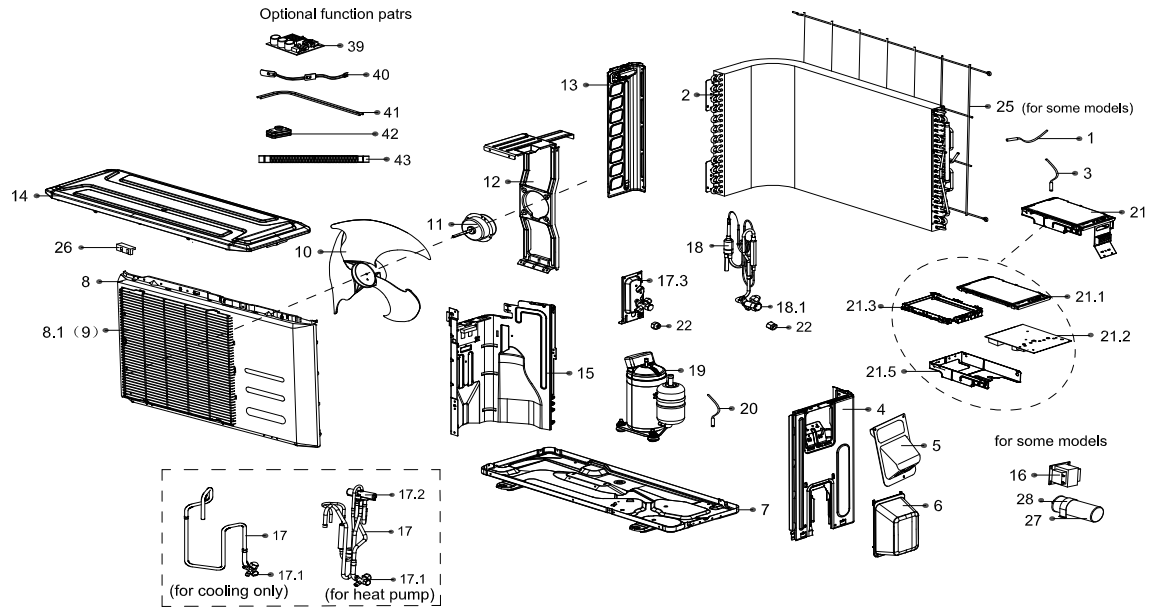

No.		Part Name	Quantity	BOM Code	BIN No.	Remark
1		Room Temperature Sensor	1.0	11201007000039	4	
2		Condenser Assembly	1.0	15822000003516	480	
3		Temperature Sensor	1.0	11201007000136	5	
4		Parts fn Right Side Plate	1.0	12222000006249	20	
5		Big handle	1.0	12222000005102	5	
6		Water Collecting Cover	1.0	12122000007150	5	
7		Chassis assembly	1.0	12222000004427	37	
8		Front panel	1.0	12222000004842	58	
9		Air Outlet Guard	1.0	12222000001880	22	
10		Axial fan	1.0	12100105000057	37	
11		Brushless DC Motor	1.0	11002015000041	159	
12		Supporter assembly of fan motor	1.0	12222000004185	9	
13		Left supporter	1.0	12222000006244	15	
14		Top cover assembly	1.0	12222000006246	28	
15		Partition board assembly	1.0	12222000004425	13	
16		Reactor	1.0	17400306000019	55	
17		4-Ways valve assembly	1.0	15422000005174	220	
17.1		Low Pressure Valve	1.0	15500204000021	29	
17.2		4-Ways valve	1.0	15500216000341	94	
17.3		Installing plate for valves	2.0	12222000002571	5	
18		High-Voltage valve Assembly	1.0	15422000005175	38	
18.1		Liquid valve	1.0	15500208000028	19	
19		Inverter Controlled Rotary Compressor	1.0	11103020000034	648	
20		Discharge temperature sensor assembly	1.0	11201007000005	10	
21		Electronic control box assembly	1.0	17222000009772	533	
21.1		Electric Installing Box Cover	1.0	12222000001455	6	
21.2		Outdoor power board assembly	1.0	17122000019269	486	
21.3		Installation board for E-parts	1.0	12122000006913	7	
21.5		Electric Installing Box Subassembly	1.0	12222000001311	12	
22		Brass Nut	1.0	15500406000010	4	
22		Brass Nut	1.0	15500406000016	3	
25		Rear Net	1.0	12222000003986	24	
26		Clamp of front net	6.0	12122000006844	0	
27		Compressor Capacitor(Round)	1.0	17400103000052	25	
28		Capacitor Clamp	1.0	12200203000007	0	

PIONEER WYS-22 Series Heat Pump Inverter Parts Diagram

System Model:	WYS0012AMFI22RD	**Indoor Unit Model:**	WS012AMFI22HLD
System Code:	22022010003774	**Indoor Code:**	22022011004280
Power Supply:	110~120 V, 1 Ph, 60Hz.		

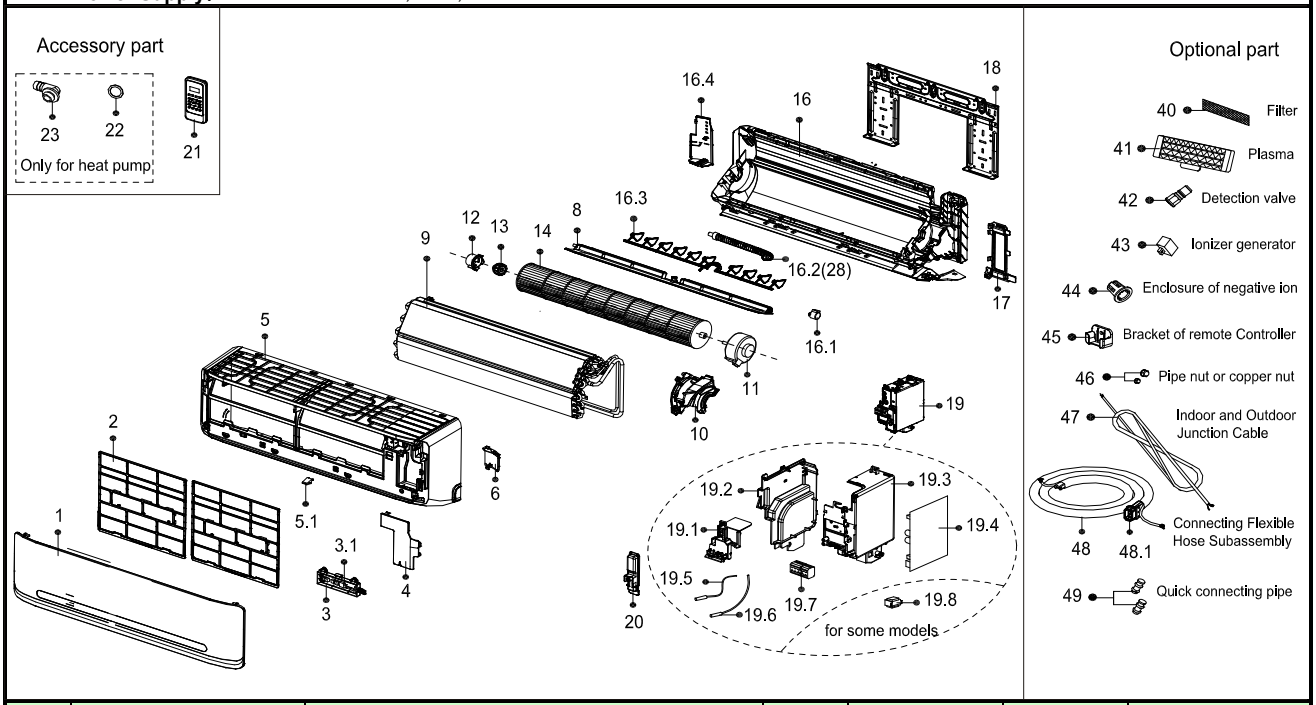

No.		Part Name	Quantity	BOM Code	BIN No.	Remark
1		Panel assembly	1.0	12122000001521	44	
2		Filter	2.0	12100204000522	7	
3		Indicator board assembly of Split Unit	1.0	17222000002878	17	
3.1		Display Panel Subassembly(Sticker)	1.0	17122000006953	12	
4		E-Parts Cover Plate	1.0	12122000006755	3	
5		frame assembly	1.0	12122000001726	64	
5.1		Screw Cap	1.0	12122000009477	0	
6		Right Cover Plate of Chassis	1.0	12122000004587	1	
8		Wind Guide Assembly	1.0	12122000005815	12	
9		Evaporator assembly	1.0	15822000003601	271	
10		Motor Bearing Cover	1.0	12122000005540	4	
11		Brushless DC Motor	1.0	11002015000031	223	
12		Bearing sleeve	1.0	12122000000350	1	
13		Bearing pedestal	1.0	12622000000006	1	
14		Cross-flow Window Rotor.	1.0	12100102000044	42	
16		Chassis assembly	1.0	12122000011818	129	
16.1		stepper motor	1.0	11002010000143	11	
16.3		Louver Assembly	1.0	12122000000038	4	
16.4		Left cover of chassis	1.0	12122000010098	1	
17		Pipe clamp board	1.0	12122000012943	2	
18		Installation Plate	1.0	12222000000018	15	
19		Electronic control box assembly	1.0	17222000009769	174	
19.1		Upper Cover Board of Electrical Control Box	1.0	12122000004577	2	
19.2		Left Side Plate of Electrical Control Box	1.0	12122000004639	6	
19.3		Right Side Plate of E-Parts Box	1.0	12122000004632	9	
19.4		Indoor main control board assembly	1.0	17122000019262	133	
19.5		Room Temperature Sensor	1.0	11201007000085	4	
19.6		Temperature Sensor	1.0	11201007000322	4	
19.7		Wire holder	1.0	17400401000094	5	
20		Electrical Control Box Cover	1.0	12122000005020	1	
21		Remote Controller	1.0	17317000001294	24	
22		Seal	1.0	12600701000039	0	
23		Extend Water Pipe	1.0	12100509000061	1	
28		Drain Hose	1.0	12100501000032	4	
40		Filter net of cold catalyst	1.0	12100204000685	1	
46		Brass Nut	1.0	15500406000012	6	
46		Brass Nut	1.0	15500406000016	3	
53		Kit of Screw Accessories	1.0	12011600000015	1	

PIONEER WYS-22 Series Heat Pump Inverter Parts Diagram

System Model: WYS012AMFI22RD
System Code: 22022010003774
Power Supply: 110~120 V, 1 Ph, 60Hz.
Outoor Unit Model: YN012AMFI22RPD
Outdoor Code: 22022016005149

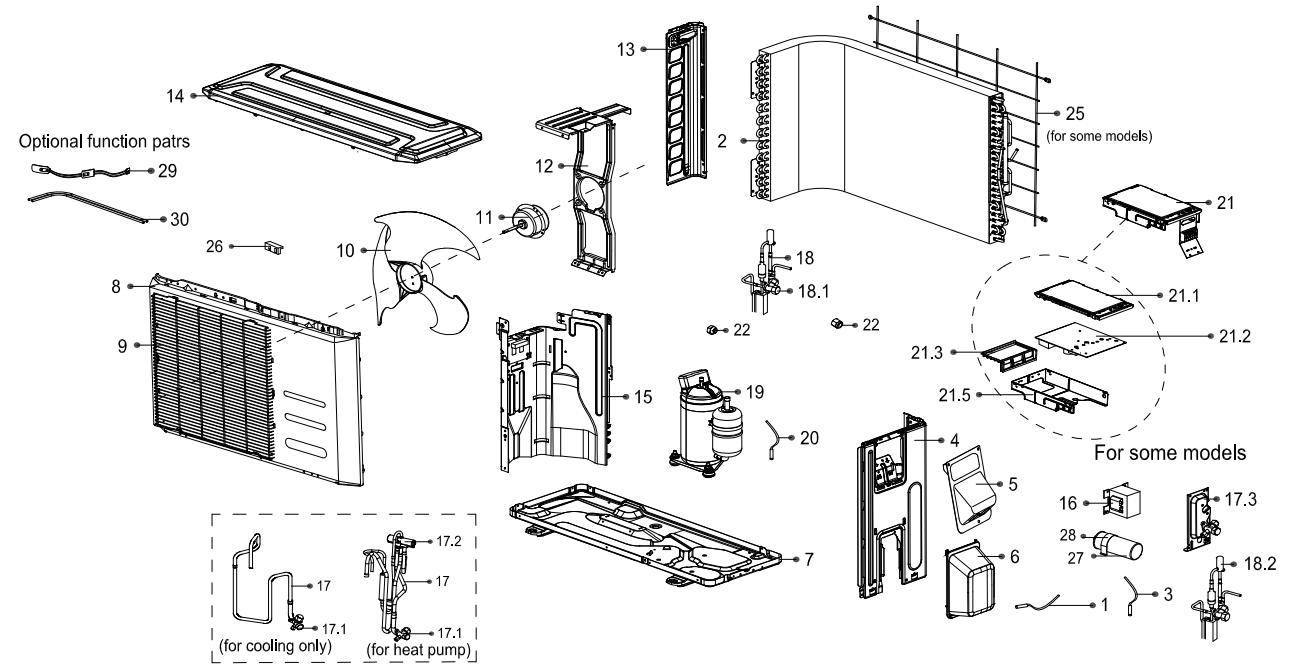

No.		Part Name	Quantity	BOM Code	BIN No.	Remark
1		Room Temperature Sensor	1.0	11201007000039	4	
2		Condenser assembly	1.0	15822000003520	515	
3		Temperature Sensor	1.0	11201007000136	5	
4		Right clapboard assembly	1.0	12222000005745	31	
5		Big handle	1.0	12222000005102	5	
6		Water Collecting Cover	1.0	12122000007150	5	
7		Chassis Assembly	1.0	12222000000576	74	
8		Front panel	1.0	12222000004463	99	
9		Air Outlet Guard	1.0	12222000001880	22	
10		Axial fan	1.0	12100105000003	31	
11		Brushless DC Motor	1.0	11002015000041	159	
12		Fan Motor Holder Subassembly	1.0	12222200001462	16	
13		Left supporter	1.0	12222000006504	11	
14		Top cover assembly	1.0	12222000002451	54	
15		Separation plate	1.0	12222000002226	25	
16		Reactor	1.0	17400306000019	55	
17		4-Ways valve assembly	1.0	15422000005173	211	
17.1		Low Pressure Valve	1.0	15500204000058	33	
17.2		4-Ways valve	1.0	15500216000341	94	
17.3		Installing plate for valves	1.0	12222000002571	5	
18		High-Voltage valve Assembly	1.0	15422000005172	39	
18.1		Liquid valve	1.0	15500208000028	19	
19		DC Inverter Rotary Compressor	1.0	11103020000479	760	
20		Discharge temperature sensor assembly	1.0	11201007000005	10	
21		Electronic control box assembly	1.0	17222000009770	533	
21.1		Electric Installing Box Cover	1.0	12222000001455	6	
21.2		Outdoor power board assembly	1.0	17122000019265	486	
21.3		Installation board for E-parts	1.0	12122000006913	7	
21.5		Electric Installing Box Subassembly	1.0	12222000001311	12	
22		Brass Nut	1.0	15500406000016	3	
22		Brass Nut	1.0	15500406000012	6	
25		Rear Net	1.0	12222000003622	21	
26		Clamp of front net	6.0	12122000006844	0	
27		Compressor Capacitor(Round)	1.0	17400103000052	25	
28		Capacitor Clamp	1.0	12200203000007	0	

PIONEER WYS-22 Series Heat Pump Inverter Parts Diagram

System Model: WYS009GMFI22RD
System Code: 22022010004162
Power Supply: 208~230 V, 1 Ph, 60Hz.
Indoor Unit Model: WS009GMFI22HLD
Indoor Code: 22022011004687

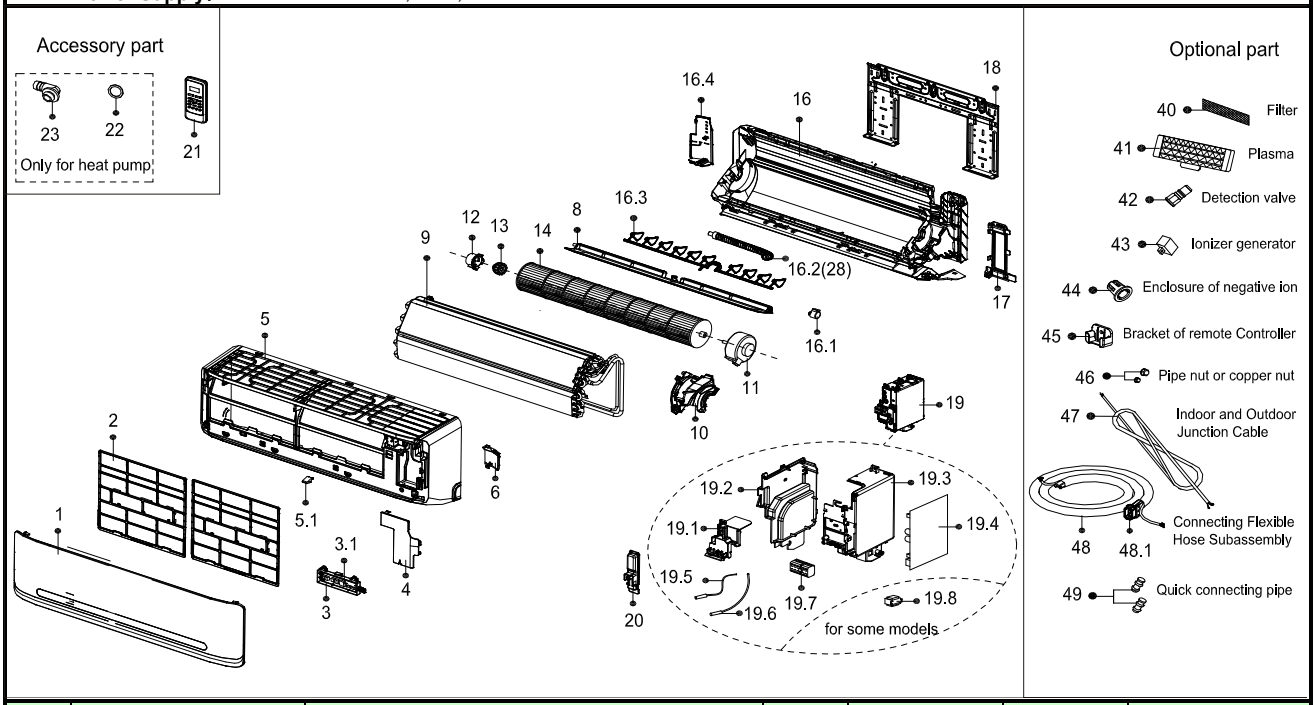

No.		Part Name	Quantity	BOM Code	BIN No.	Remark
1		Panel assembly	1.0	12122000001521	44	
2		Filter	2.0	12100204000522	7	
3		Indicator board assembly of Split Unit	1.0	17222000002878	17	
3.1		Display Panel Subassembly(Sticker)	1.0	17122000006953	12	
4		E-Parts Cover Plate	1.0	12122000006755	3	
5		frame assembly	1.0	12122000001726	64	
5.1		Screw Cap	1.0	12122000009477	0	
6		Right Cover Plate of Chassis	1.0	12122000004587	1	
8		Wind Guide Assembly	1.0	12122000005815	12	
9		Evaporator assembly	1.0	15822000003677	269	
10		Motor Bearing Cover	1.0	12122000005540	4	
11		Brushless DC Motor	1.0	11002015000248	192	
12		Bearing sleeve	1.0	12122000000350	1	
13		Bearing pedestal	1.0	12622000000006	1	
14		Cross-flow Window Rotor.	1.0	12100102000044	42	
16		Chassis assembly	1.0	12122000011818	129	
16.1		stepper motor	1.0	11002010000143	11	
16.3		Louver Assembly	1.0	12122000000038	4	
16.4		Left cover of chassis	1.0	12122000010098	1	
17		Pipe clamp board	1.0	12122000012943	2	
18		Installation Plate	1.0	12222000000018	15	
19		Electronic control box assembly	1.0	17222000009970	173	
19.1		Upper Cover Board of Electrical Control Box	1.0	12122000004577	2	
19.2		Left Side Plate of Electrical Control Box	1.0	12122000004639	6	
19.3		Right Side Plate of E-Parts Box	1.0	12122000004632	9	
19.4		Indoor main control board assembly	1.0	17122000019549	132	
19.5		Room Temperature Sensor	1.0	11201007000085	4	
19.6		Temperature Sensor	1.0	11201007000322	4	
19.7		Wire holder	1.0	17400401000094	5	
20		Electrical Control Box Cover	1.0	12122000005020	1	
21		Remote Controller	1.0	17317000001294	24	
22		Seal	1.0	12600701000039	0	
23		Extend Water Pipe	1.0	12100509000061	1	
28		Drain Hose	1.0	12100501000032	4	
40		Filter net of cold catalyst	1.0	12100204000685	1	
46		Brass Nut	1.0	15500406000010	4	
46		Brass Nut	1.0	15500406000016	3	
53		Kit of Screw Accessories	1.0	12011600000015	1	

PIONEER WYS-22 Series Heat Pump Inverter Parts Diagram

System Model: WYS009GMFI22RD **Outoor Unit Model:** YN009GMFI22RPD
System Code: 22022010004162 **Outdoor Code:** 22022016005160
Power Supply: 208~230 V, 1 Ph, 60Hz.

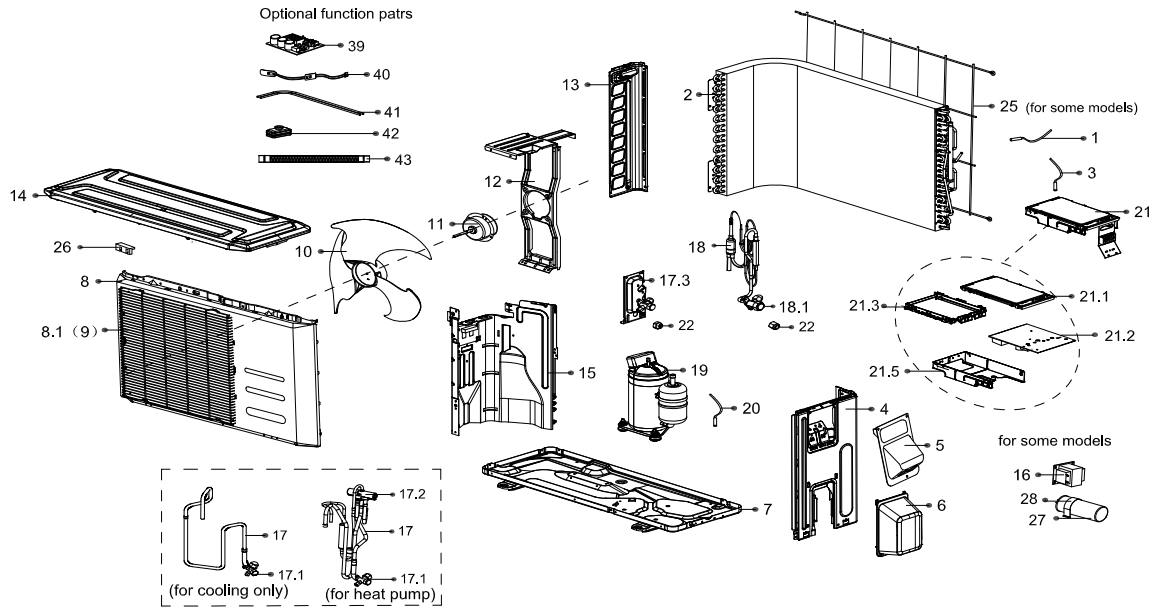

No.		Part Name	Quantity	BOM Code	BIN No.	Remark
1		Room Temperature Sensor	1.0	11201007000039	4	
2		Condenser Assembly	1.0	15822000003516	480	
3		Temperature Sensor	1.0	11201007000136	5	
4		Parts fn Right Side Plate	1.0	12222000006249	20	
5		Big handle	1.0	12222000005102	5	
6		Water Collecting Cover	1.0	12122000007150	5	
7		Chassis assembly	1.0	12222000004427	37	
8		Front panel	1.0	12222000004842	58	
9		Air Outlet Guard	1.0	12222000001880	22	
10		Axial fan	1.0	12100105000057	37	
11		Brushless DC Motor	1.0	11002015000041	159	
12		Supporter assembly of fan motor	1.0	12222000004185	9	
13		Left supporter	1.0	12222000006244	15	
14		Top cover assembly	1.0	12222000006246	28	
15		Partition board assembly	1.0	12222000004425	13	
17		4-Ways valve assembly	1.0	15422000004672	200	
17.1		Low Pressure Valve	1.0	15500204000021	29	
17.2		4-way Valve	1.0	15500216000028	84	
17.3		Installing plate for valves	1.0	12222000002571	5	
18		High-Voltage valve Assembly	1.0	15422000004932	157	
18.1		Liquid valve	1.0	15500208000028	19	
18.2		Electric expansive valve assembly	1.0	15500213000047	186	
19		Inverter Controlled Rotary Compressor	1.0	11103020000034	648	
20		Discharge temperature sensor assembly	1.0	11201007000005	10	
21		Electronic control box assembly	1.0	17222000009804	656	
21.1		Electric Installing Box Cover	1.0	12222000001455	6	
21.2		Outdoor power board assembly	1.0	17122000019317	618	
21.3		Installation board for E-parts	1.0	12122000006913	7	
21.5		Electric Installing Box Subassembly	1.0	12222000001311	12	
22		Brass Nut	1.0	15500406000016	3	
22		Brass Nut	1.0	15500406000010	4	
25		Rear Net	1.0	12222000003986	24	
26		Clamp of front net	6.0	12122000006844	0	

PIONEER WYS-22 Series Heat Pump Inverter Parts Diagram

System Model:	WYS012GMFI22RD	**Indoor Unit Model:**	WS012GMFI22HLD
System Code:	22022010003635	**Indoor Code:**	22022011004161
Power Supply:	208~230 V, 1 Ph, 60Hz.		

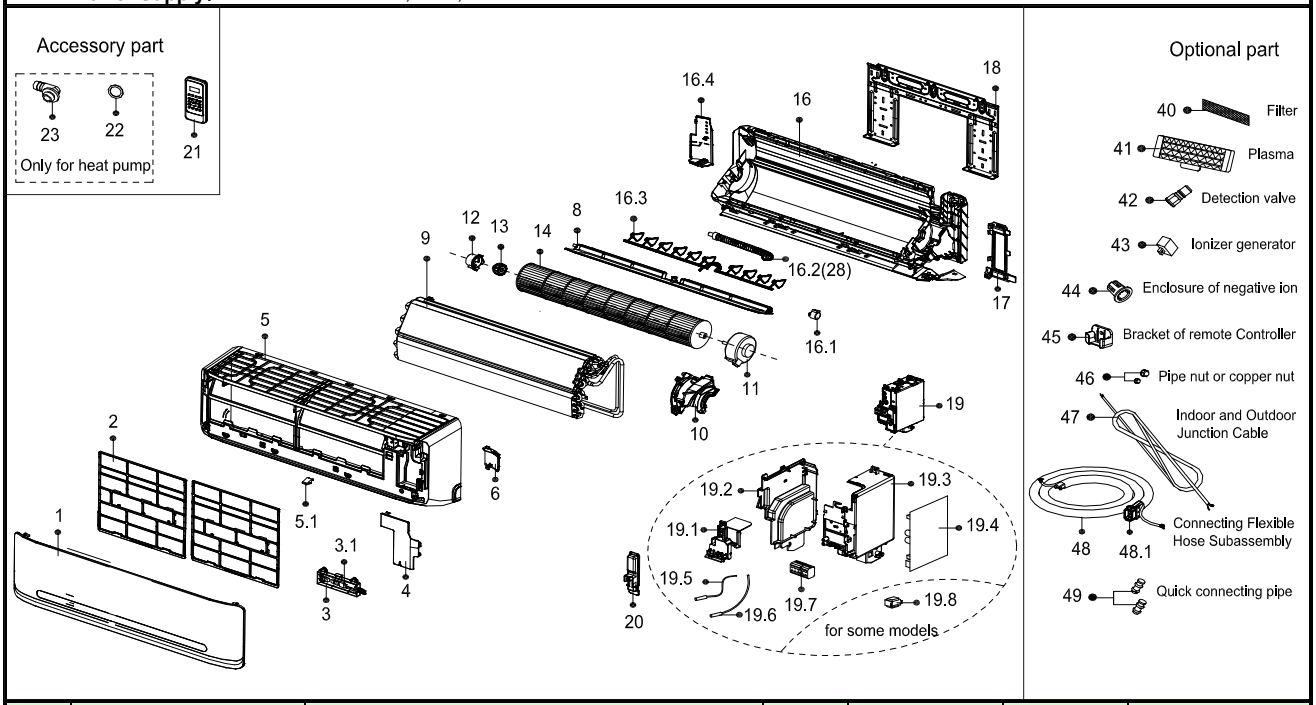

No.		Part Name	Quantity	BOM Code	BIN No.	Remark
1		Panel assembly	1.0	12122000001521	44	
2		Filter	2.0	12100204000522	7	
3		Indicator board assembly of Split Unit	1.0	17222000002878	17	
3.1		Display Panel Subassembly(Sticker)	1.0	17122000006953	12	
4		E-Parts Cover Plate	1.0	12122000006755	3	
5		frame assembly	1.0	12122000001726	64	
5.1		Screw Cap	1.0	12122000009477	0	
6		Right Cover Plate of Chassis	1.0	12122000004587	1	
8		Wind Guide Assembly	1.0	12122000005815	12	
9		Evaporator assembly	1.0	15822000003601	271	
10		Motor Bearing Cover	1.0	12122000005540	4	
11		Brushless DC Motor	1.0	11002015000248	192	
12		Bearing sleeve	1.0	12122000000350	1	
13		Bearing pedestal	1.0	12622000000006	1	
14		Cross-flow Window Rotor.	1.0	12100102000044	42	
16		Chassis assembly	1.0	12122000011818	129	
16.1		stepper motor	1.0	11002010000143	11	
16.3		Louver Assembly	1.0	12122000000038	4	
16.4		Left cover of chassis	1.0	12122000010098	1	
17		Pipe clamp board	1.0	12122000012943	2	
18		Installation Plate	1.0	12222000000018	15	
19		Electronic control box assembly	1.0	17222000009469	178	
19.1		Upper Cover Board of Electrical Control Box	1.0	12122000004577	2	
19.2		Left Side Plate of Electrical Control Box	1.0	12122000004639	6	
19.3		Right Side Plate of E-Parts Box	1.0	12122000004632	9	
19.4		Indoor main control board assembly	1.0	17122000018850	139	
19.5		Room Temperature Sensor	1.0	11201007000085	4	
19.6		Temperature Sensor	1.0	11201007000322	4	
19.7		Wire holder	1.0	17400401000094	5	
20		Electrical Control Box Cover	1.0	12122000005020	1	
21		Remote Controller	1.0	17317000001294	24	
22		Seal	1.0	12600701000039	0	
23		Extend Water Pipe	1.0	12100509000061	1	
28		Drain Hose	1.0	12100501000032	4	
40		Filter net of cold catalyst	1.0	12100204000685	1	
46		Brass Nut	1.0	15500406000012	6	
46		Brass Nut	1.0	15500406000016	3	
53		Kit of Screw Accessories	1.0	12011600000015	1	

PIONEER WYS-22 Series Heat Pump Inverter Parts Diagram

System Model: WYS012GMFI22RD
System Code: 22022010003635
Power Supply: 208~230 V, 1 Ph, 60Hz.
Outoor Unit Model: YN012GMFI22RPD
Outdoor Code: 22022016005161

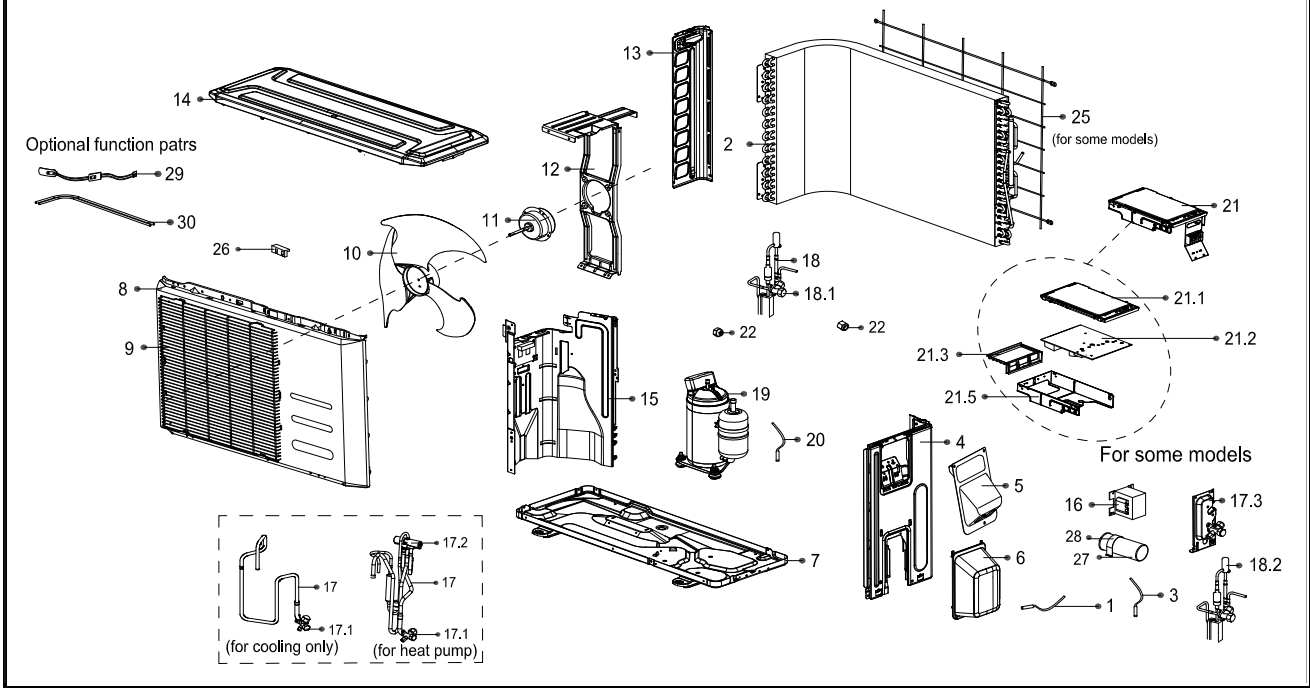

No.		Part Name	Quantity	BOM Code	BIN No.	Remark
1		Room Temperature Sensor	1.0	11201007000039	4	
2		Condenser assembly	1.0	15822000003520	515	
3		Temperature Sensor	1.0	11201007000136	5	
4		Right clapboard assembly	1.0	12222000005745	31	
5		Big handle	1.0	12222000005102	5	
6		Water Collecting Cover	1.0	12122000007150	5	
7		Chassis Assembly	1.0	12222000000576	74	
8		Front panel	1.0	12222000004463	99	
9		Air Outlet Guard	1.0	12222000001880	22	
10		Axial fan	1.0	12100105000051	33	
11		Brushless DC Motor	1.0	11002015000041	159	
12		Fan Motor Holder Subassembly	1.0	12222200001462	16	
13		Left supporter	1.0	12222000006504	11	
14		Top cover assembly	1.0	12222000002451	54	
15		Separation plate	1.0	12222000002226	25	
17		4-Ways valve assembly	1.0	15422000004933	206	
17.1		Low Pressure Valve	1.0	15500204000058	33	
17.2		4-way Valve	1.0	15500216000028	84	
17.3		Installing plate for valves	1.0	12222000002571	5	
18		High-Voltage valve Assembly	1.0	15422000004932	157	
18.1		Liquid valve	1.0	15500208000028	19	
18.2		Electric expansive valve assembly	1.0	15500213000047	186	
19		DC Inverter Rotary Compressor	1.0	11103020000479	760	
20		Discharge temperature sensor assembly	1.0	11201007000005	10	
21		Electronic control box assembly	1.0	17222000009468	670	
21.1		Electric Installing Box Cover	1.0	12222000001455	6	
21.2		Outdoor power board assembly	1.0	17122000018848	632	
21.3		Installation board for E-parts	1.0	12122000006913	7	
21.5		Electric Installing Box Subassembly	1.0	12222000001311	12	
22		Brass Nut	1.0	15500406000016	3	
22		Brass Nut	1.0	15500406000012	6	
25		Rear Net	1.0	12222000003622	21	
26		Clamp of front net	6.0	12122000006844	0	

PIONEER WYS-22 Series Heat Pump Inverter Parts Diagram

System Model: WYS018GMFI22RD
System Code: 22022010003652
Power Supply: 208~230 V, 1 Ph, 60Hz.

Indoor Unit Model: WS018GMFI22HLD
Indoor Code: 22022011004162

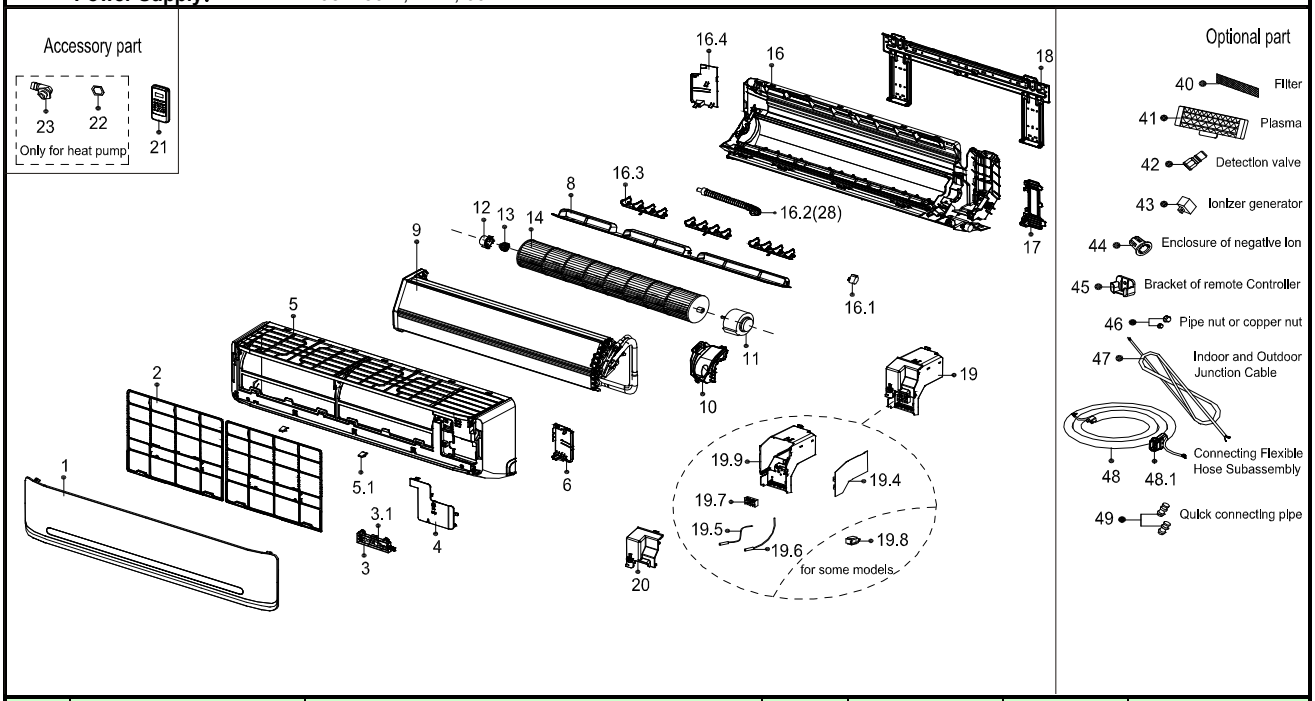

No.		Part Name	Quantity	BOM Code	BIN No.	Remark
1		Panel assembly	1.0	12122000001602	60	
2		Filter	2.0	12100204000461	17	
3		Indicator board assembly of Split Unit	1.0	17222000002837	18	
3.1		Display Panel Subassembly(Sticker)	1.0	17122000006953	12	
4		E-Parts Cover Plate	1.0	12122000006733	7	
5		frame assembly	1.0	12122000001956	103	
5.1		Screw Cap	2.0	12122000008242	0	
6		Right Cover Plate of Chassis	1.0	12122000004608	3	
8		Wind Guide	1.0	12122000006335	24	
9		Evaporator assembly Gas valve assembly	1.0	15822000003676	422	
10		Motor Bearing Cover	1.0	12122000005512	6	
11		Brushless DC Motor	1.0	11002015000094	341	MTRI-WS018GMFI17HL
12		Bearing sleeve	1.0	12122000000350	1	
13		Bearing pedestal	1.0	12622000000006	1	
14		Cross-flow window rotor	1.0	12100102000018	60	BW-WS018GMFI17HLD
16		Chassis assembly	1.0	12122000011879	250	
16.1		stepper motor	1.0	11002010000049	18	
16.3		Louver	3.0	12122000000135	0	
16.4		Left Cover Plate of Chassis	1.0	12122000004614	3	
17		Pipe clamp board	1.0	12122000012942	2	
18		Installation Plate Subassembly	1.0	12222000000026	19	
19		E-Parts Box assembly of Split Indoor Unit	1.0	17222000009479	199	PCBI-WS018GMFI17HL
19.4		Indoor Main Control Board Subassembly (Sticker)	1.0	17122000018869	158	
19.5		Room Temperature Sensor	1.0	11201007000085	4	
19.6		Temperature Sensor	1.0	11201007000126	4	
19.7		Wire holder	1.0	17400401000006	7	
19.9		Electrical Control Box	1.0	12122000007845	17	
20		Electrical Control Box Cover	1.0	12122000005024	4	
21		Remote Controller	1.0	17317000001294	24	
22		Seal	1.0	12600701000039	0	
23		Extend Water Pipe	1.0	12100509000061	1	
28		Drain Hose	1.0	12100501000032	4	
40		Filter net of cold catalyst	1.0	12100204000685	1	
46		Brass Nut	1.0	15500406000012	6	
46		Brass Nut	1.0	15500406000016	3	
53		Kit of Screw Accessories	1.0	12011600000015	1	

PIONEER WYS-22 Series Heat Pump Inverter Parts Diagram

System Model:	WYS018GMFI22RD	**Outoor Unit Model:**	YN018GMFI22RPD
System Code:	22022010003652	**Outdoor Code:**	22022016005162
Power Supply:	208~230 V, 1 Ph, 60Hz.		

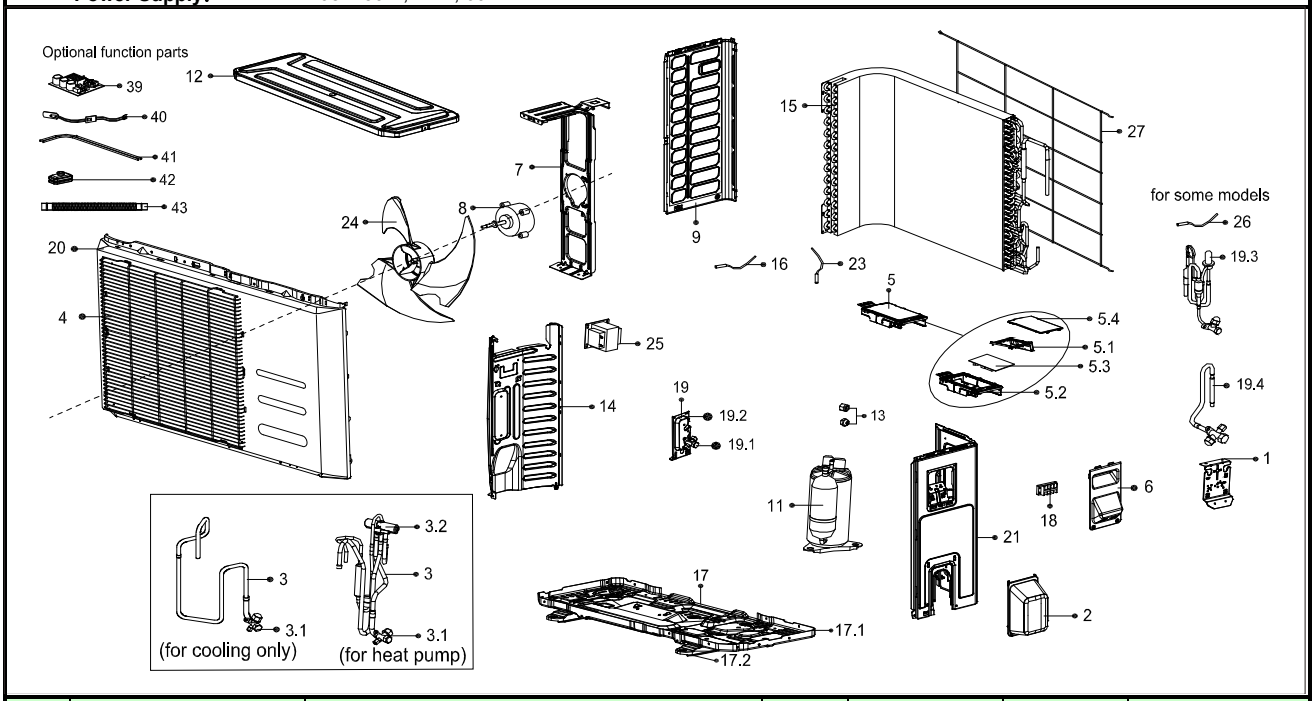

No.		Part Name	Quantity	BOM Code	BIN No.	Remark
1		Terminal board	1.0	12222000004782	4	
2		Water Collecting Cover	1.0	12122000007150	5	
3		4-way valve assembly	1.0	15422000004873	234	
3.1		Low Pressure Valve	1.0	15500204000046	32	
3.2		4-way Valve	1.0	15500216000026	93	
4		Air Outlet Guard	1.0	12222000001865	31	
5		Electronic control box assembly	1.0	17222000009477	824	
5.2		Cover of electronic control box	1.0	12222000004827	20	
5.3		Outdoor main control board assembly	1.0	17122000018864	725	
5.4		Electric Installing Box Subassembly	1.0	12122000006856	24	
6		Big handle	1.0	12222000005102	5	
7		Supporter assembly of fan motor	1.0	12222000004829	36	
8		Brushless DC Motor	1.0	11002015000397	263	
9		Left side plate assembly	1.0	12222000004831	26	
11		Inverter Controlled Rotary Compressor	1.0	11103020000006	815	
12		Top cover assembly	1.0	12222000004835	44	
13		Brass Nut	1.0	15500406000012	6	
13		Brass Nut	1.0	15500406000016	3	
14		Partition board assembly	1.0	12222000004784	25	
15		Condenser Assembly	1.0	15822000003619	720	
16		Room Temperature Sensor	1.0	11201007000039	4	
17		Chassis assembly	1.0	12222000004787	77	
17.1		Chassis	1.0	12222000004786	63	
17.2		Footing	1.0	12222000004788	10	
18		Wire holder	1.0	17400401000075	23	
19		Liquid valve assembly	1.0	15422000004952	167	
19.1		Liquid valve	1.0	15500208000028	19	
19.2		Installing plate for valves	1.0	12222000002571	5	
19.3		Electric expansive valve assembly	1.0	15500213000047	186	
20		Front panel	1.0	12222000006304	133	
21		Right side plate	1.0	12222000004830	42	
23		Temperature Sensor	1.0	11201007000069	4	
24		Axial fan	1.0	12100105000181	50	
25		Reactor	1.0	17400306000053	65	
26		Discharge temperature sensor assembly	1.0	11201007000005	10	
27		Rear net	1.0	12222000004833	25	

PIONEER WYS-22 Series Heat Pump Inverter Parts Diagram

System Model: WYS024GMFI22RD
System Code: 22022010003552
Power Supply: 208~230 V, 1 Ph, 60Hz.
Indoor Unit Model: WS024GMFI22HLD
Indoor Code: 22022011004078

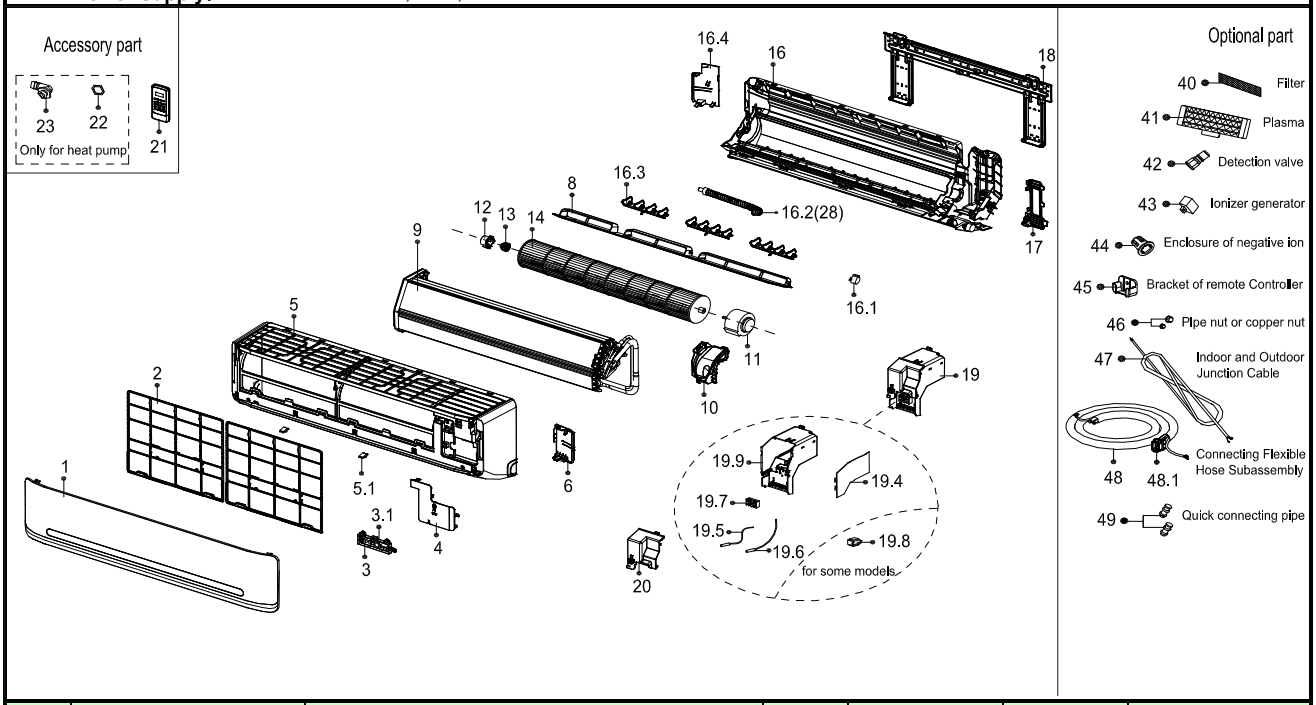

No.		Part Name	Quantity	BOM Code	BIN No.	Remark
1		Panel assembly	1.0	12122000001602	60	
2		Filter	2.0	12100204000461	17	
3		Indicator board assembly of Split Unit	1.0	17222000002837	18	
3.1		Display Panel Subassembly(Sticker)	1.0	17122000006953	12	
4		E-Parts Cover Plate	1.0	12122000006733	7	
5		frame assembly	1.0	12122000001956	103	
5.1		Screw Cap	2.0	12122000008242	0	
6		Right Cover Plate of Chassis	1.0	12122000004608	3	
8		Wind Guide	1.0	12122000006335	24	
9		Evaporator assembly Gas valve assembly	1.0	15822000003638	425	
10		Motor Bearing Cover	1.0	12122000005512	6	
11		Brushless DC Motor	1.0	11002015000094	341	
12		Bearing sleeve	1.0	12122000000350	1	
13		Bearing pedestal	1.0	12622000000006	1	
14		Cross-flow window rotor	1.0	12100102000018	60	
16		Chassis assembly	1.0	12122000011879	250	
16.1		stepper motor	1.0	11002010000049	18	
16.3		Louver	3.0	12122000000135	0	
16.4		Left Cover Plate of Chassis	1.0	12122000004614	3	
17		Pipe clamp board	1.0	12122000012942	2	
18		Installation Plate Subassembly	1.0	12222000000026	19	
19		E-Parts Box assembly of Split Indoor Unit	1.0	17222000009476	198	
19.4		Indoor main control board assembly	1.0	17122000018862	158	
19.5		Room Temperature Sensor	1.0	11201007000085	4	
19.6		Temperature Sensor	1.0	11201007000126	4	
19.7		Wire holder	1.0	17400401000006	7	
19.9		Electrical Control Box	1.0	12122000007845	17	
20		Electrical Control Box Cover	1.0	12122000005024	4	
21		Remote Controller	1.0	17317000001294	24	
22		Seal	1.0	12600701000039	0	
23		Extend Water Pipe	1.0	12100509000061	1	
28		Drain Hose	1.0	12100501000032	4	
40		Filter net of cold catalyst	1.0	12100204000685	1	
46		Brass Nut	1.0	15500406000003	8	
46		Brass Nut	1.0	15500406000010	4	
53		Kit of Screw Accessories	1.0	12011600000015	1	

PIONEER WYS-22 Series Heat Pump Inverter Parts Diagram

System Model: WYS024GMFI22RD
System Code: 22022010003552
Power Supply: 208~230 V, 1 Ph, 60Hz.
Outoor Unit Model: YN024GMFI22RPD
Outdoor Code: 22022016005099

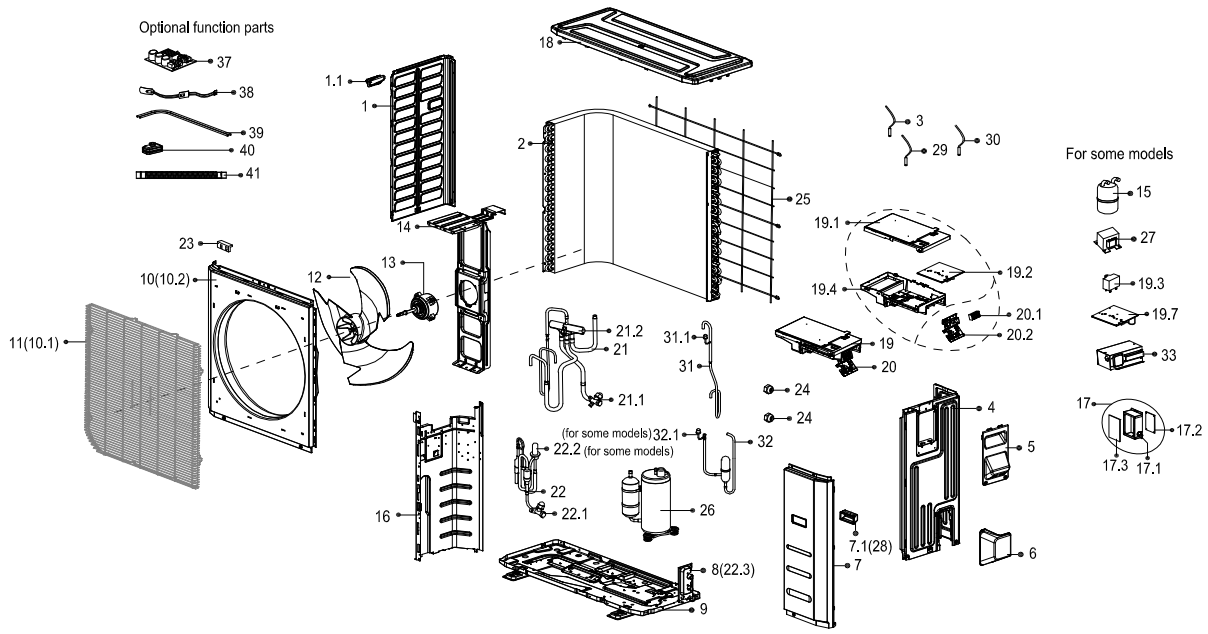

No.		Part Name	Quantity	BOM Code	BIN No.	Remark
1		Left side plate assembly of cabinet	1.0	12222000006665	48	
1.1		Small Handle	1.0	12100701000033	1	
2		Condenser assembly	1.0	15822000003716	946	
3		Temperature Sensor	1.0	11201007000006	5	
4		Rear right clapboard assembly	1.0	12222000006664	82	
5		Big Handle	1.0	12222000004019	8	
6		Water Collecting Cover	1.0	12122200002695	7	
7		Front right clapboard assembly	1.0	12222500000633	61	
7.1		Little Handle	1.0	12100702000038	2	
9		Chassis assembly	1.0	12222000004762	149	
10		Front panel	1.0	12222000004983	123	
11		Air Outlet Guard	1.0	12222200000907	152	
12		Axial fan	1.0	12100105000084	58	
13		Brushless DC Motor	1.0	11002015000247	297	
14		Holder for fan motor assembly	1.0	12222000005162	65	
16		Separator Assembly	1.0	12222200001158	36	
18		Top cover assembly	1.0	12222500000541	79	
19		Electronic control box assembly	1.0	17222000009478	881	
19.1		Electric Installing Box Cover Subassembly	1.0	12122200002713	40	
19.2		Outdoor main control board assembly	1.0	17122000018866	773	
19.4		Electric Installing Box Subassembly	1.0	12122200002717	35	
20		Terminal Block Subassembly of Electrical Control Box	1.0	17222000002906	40	
20.1		Wire holder	1.0	17400401000037	11	
20.2		Wiring terminal installing plate	1.0	12222200001476	4	
21		Piping Assemby	1.0	15422000005608	234	
21.1		Low Pressure Valve	1.0	15500204000025	44	
21.2		4-way Valve	1.0	15500216000026	93	
22		Liquid valve Assembly	1.0	15422000003309	331	
22.1		Low Pressure Valve	1.0	15500204000021	29	
22.2		Electronic expansion valve	1.0	15500213000265	128	
22.3		Installation plate for valves	1.0	12222200002110	6	
23		Clamp of front net	8.0	12122000006844	0	
24		Brass Nut	1.0	15500406000003	8	
24		Brass Nut	1.0	15500406000010	4	
25		Rear net	1.0	12222000006604	29	
26		Inverter Controlled Rotary Compressor	1.0	11103020000179	1184	
27		Reactor	1.0	17400306000058	93	
29		Discharge temperature sensor assembly	1.0	11201007000157	7	
30		Room Temperature Sensor	1.0	11201007000039	4	