PIONEER FYB Series Heat Pump Inverter Parts Diagram (Indoor Section)

System Model: FYB009GMFILCRD
Nominal Capacity: 9000 BTU
Power Supply: 208~230 V, 1 Ph, 60Hz.
Indoor Unit Model: FB009GMFILCFHD
Indoor Code: 22022611000023

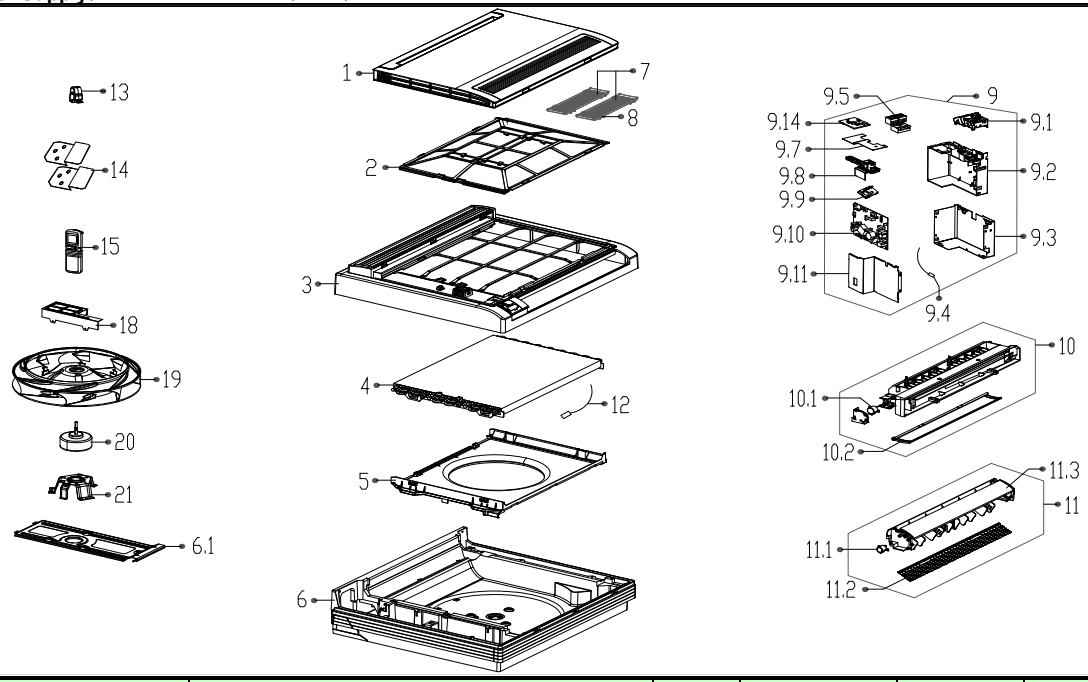

No.		Part Name	Quantity	BOM Code	BIN No.	Remark
1		Panel ass'y	1.0	12122600000014	29	
2		Filter	1.0	12100204000704	17	
3		Panel frame assembly	1.0	12122600000026	34	
4		Evaporator assembly Gas valve assembly	1.0	15822300000067	124	
5		Air Inducting Coil Subassembly	1.0	12122600000037	14	
6		Chassis Assembly	1.0	12122600000035	167	
6.1		Hanging plate subassembly	1.0	12222600000003	15	
7		Formaldehyde-kille	2.0	12100204000685	1	
8		Net enclosure of air freshener	2.0	12122000007415	1	
9		E-Parts Box assembly	1.0	17222600000005	220	
9.1		Installation boad ass'y	1.0	12122600000030	1	
9.2		Electronic control box	1.0	12122600000031	8	
9.3		Control box boards. II	1.0	12222600000010	5	
9.4		Room Temperature Sensor	1.0	11201007000073	3	
9.5		Wire holder	1.0	17400401000069	6	
9.7		Sealing Plate of Electrical Control Box	1.0	12222600000008	1	
9.8		Electric installation board	1.0	12122600000029	1	
9.9		Display board ass'y	1.0	17122700000267	19	
9.10		Indoor Main Control Board Subassembly (Tie-in, RoHS)Indoo	1.0	17122700000109	137	
9.11		Subassembly of Electrical Control Box Boarding I	1.0	12222600000009	5	
9.14		Subassembly of Auxiliary Board with an auxiliary electric heate	1.0	17122700000382	12	
10		Water receiver subassembly	1.0	12122600000007	45	
10.1		stepper motor	1.0	11002010000002	12	
10.2		Pile Coating,lower Air Guide Strip	1.0	12122600000055	11	
11		Air Outlet Frame Subassembly	1.0	12122600000027	26	
11.1		stepper motor	1.0	11002010000046	12	
11.2		Protecting net	1.0	12222600000006	4	
11.3		Upper Horizontal Louver	1.0	12122600000072	3	
12		Temperature Sensor	1.0	11201007000318	3	
13		Pipe clamp	1.0	12100303000076	2	
14		Installation clamp	2.0	12222700000052	1	
15		Remote controller	1.0	17317000000099	45	
18		Electrical Control Box Cover Board Subassembly	1.0	12222600000027	3	
19		Centrifugal Fan	1.0	12100103000016	142	
20		Brushless DC Motor	1.0	11002015000337	216	
21		Motor bracket	1.0	12222600000004	4	

PIONEER FYB Series Heat Pump Inverter Parts Diagram (Outdoor Section)

System Model: FYB009GMFILCRD
Nominal Capacity: 9000 BTU
Power Supply: 208~230 V, 1 Ph, 60Hz.
Outoor Unit Model: YN009GMFI22RPD
Outdoor Code: 22022016005160

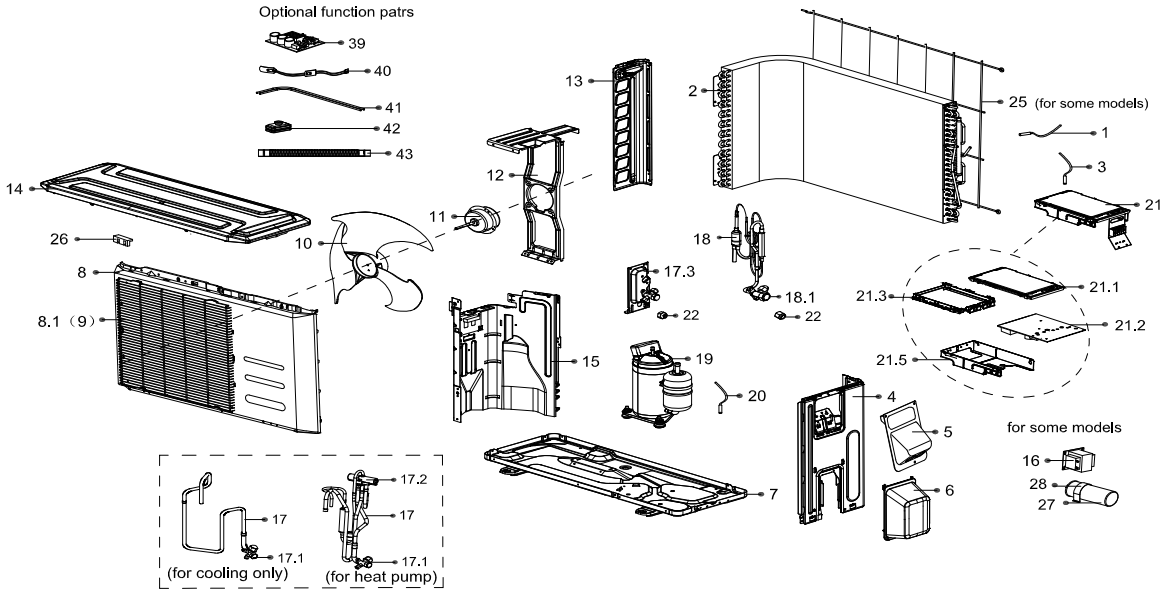

No.		Part Name	Quantity	BOM Code	BIN No.	Remark
1		Room Temperature Sensor	1.0	11201007000039	4	
2		Condenser Assembly	1.0	15822000003516	480	
3		Temperature Sensor	1.0	11201007000136	5	
4		Parts fn Right Side Plate	1.0	12222000006249	20	
5		Big handle	1.0	12222000005102	5	
6		Water Collecting Cover	1.0	12122000007150	5	
7		Chassis assembly	1.0	12222000004427	37	
8		Front panel	1.0	12222000004842	58	
9		Air Outlet Guard	1.0	12222000001880	22	
10		Axial fan	1.0	12100105000057	37	
11		Brushless DC Motor	1.0	11002015000041	159	
12		Supporter assembly of fan motor	1.0	12222000004185	9	
13		Left supporter	1.0	12222000006244	15	
14		Top cover assembly	1.0	12222000006246	28	
15		Partition board assembly	1.0	12222000004425	13	
17		4-Ways valve assembly	1.0	15422000004672	200	
17.1		Low Pressure Valve	1.0	15500204000021	29	
17.2		4-way Valve	1.0	15500216000028	84	
17.3		Installing plate for valves	1.0	12222000002571	5	
18		High-Voltage valve Assembly	1.0	15422000004932	157	
18.1		Liquid valve	1.0	15500208000028	19	
18.2		Electric expansive valve assembly	1.0	15500213000047	186	
19		Inverter Controlled Rotary Compressor	1.0	11103020000034	648	
20		Discharge temperature sensor assembly	1.0	11201007000005	10	
21		Electronic control box assembly	1.0	17222000009804	656	
21.1		Electric Installing Box Cover	1.0	12222000001455	6	
21.2		Outdoor power board assembly	1.0	17122000019317	618	
21.3		Installation board for E-parts	1.0	12122000006913	7	
21.5		Electric Installing Box Subassembly	1.0	12222000001311	12	
22		Brass Nut	1.0	15500406000016	3	
22		Brass Nut	1.0	15500406000010	4	
25		Rear Net	1.0	12222000003986	24	
26		Clamp of front net	6.0	12122000006844	0	

PIONEER FYB Series Heat Pump Inverter Parts Diagram (Indoor Section)

System Model: FYB012GMFILCRD
Nominal Capacity: 12000 BTU
Power Supply: 208~230 V, 1 Ph, 60Hz.
Indoor Unit Model: FB012GMFILCFHD
Indoor Code: 22022611000024

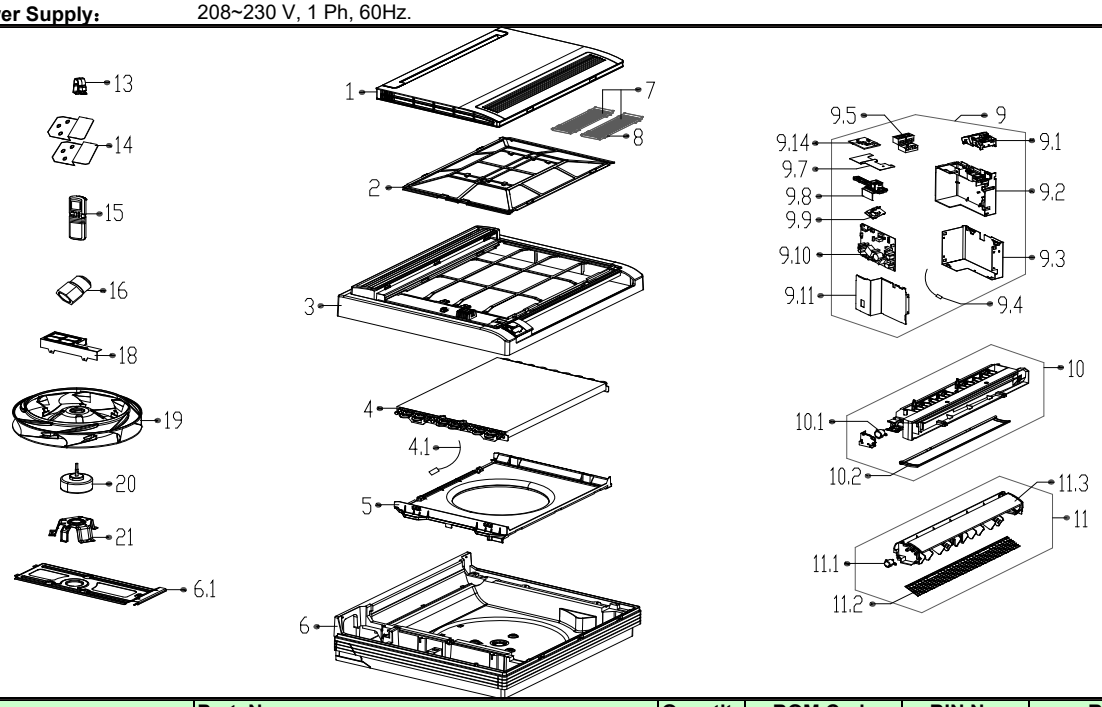

No.		Part Name	Quantity	BOM Code	BIN No.	Remark
1		Panel ass'y	1.0	12122600000014	29	
2		Filter	1.0	12100204000704	17	
3		Panel frame assembly	1.0	12122600000026	34	
4		Evaporator assembly Gas valve assembly	1.0	15822300000066	243	
4.1		Temperature Sensor	1.0	11201007000318	3	
5		Air Inducting Coil Subassembly	1.0	12122600000037	14	
6		Chassis Assembly	1.0	12122600000035	167	
6.1		Hanging plate subassembly	1.0	12222600000003	15	
7		Formaldehyde-kille	2.0	12100204000685	1	
8		Net enclosure of air freshener	2.0	12122000007415	1	
9		E-Parts Box assembly	1.0	17222600000008	228	
9.1		Installation boad ass'y	1.0	12122600000030	1	
9.2		Electronic control box	1.0	12122600000031	8	
9.3		Control box boards. II	1.0	12222600000010	5	
9.4		Room Temperature Sensor	1.0	11201007000073	3	
9.5		Wire holder	1.0	17400401000069	6	
9.7		Sealing Plate of Electrical Control Box	1.0	12222600000008	1	
9.8		Electric installation board	1.0	12122600000029	1	
9.9		Display board ass'y	1.0	17122700000267	19	
9.10		Indoor Main Control Board Subassembly (Tie-in, RoHS)Indoo	1.0	17122700000040	127	
9.11		Subassembly of Electrical Control Box Boarding I	1.0	12222600000009	5	
9.14		Subassembly of Auxiliary Board with an auxiliary electric heate	1.0	17122700000382	12	
10		Water receiver subassembly	1.0	12122600000007	45	
10.1		stepper motor	1.0	11002010000002	12	
10.2		Pile Coating,lower Air Guide Strip	1.0	12122600000055	11	
11		Air Outlet Frame Subassembly	1.0	12122600000027	26	
11.1		stepper motor	1.0	11002010000046	12	
11.2		Protecting net	1.0	12222600000006	4	
11.3		Upper Horizontal Louver	1.0	12122600000072	3	
13		Pipe clamp	1.0	12100303000076	2	
14		Installation clamp	2.0	12222700000052	1	
15		Remote controller	1.0	17317000000099	45	
18		Electrical Control Box Cover Board Subassembly	1.0	12222600000027	3	
19		Centrifugal Fan	1.0	12100103000016	142	
20		Brushless DC Motor	1.0	11002015000337	216	
21		Motor bracket	1.0	12222600000004	4	

PIONEER FYB Series Heat Pump Inverter Parts Diagram (Outdoor Section)

System Model: FYB012GMFILCRD
Nominal Capacity: 12000 BTU
Power Supply: 208~230 V, 1 Ph, 60Hz.
Outoor Unit Model: YN012GMFI22RPD
Outdoor Code: 22022016005161

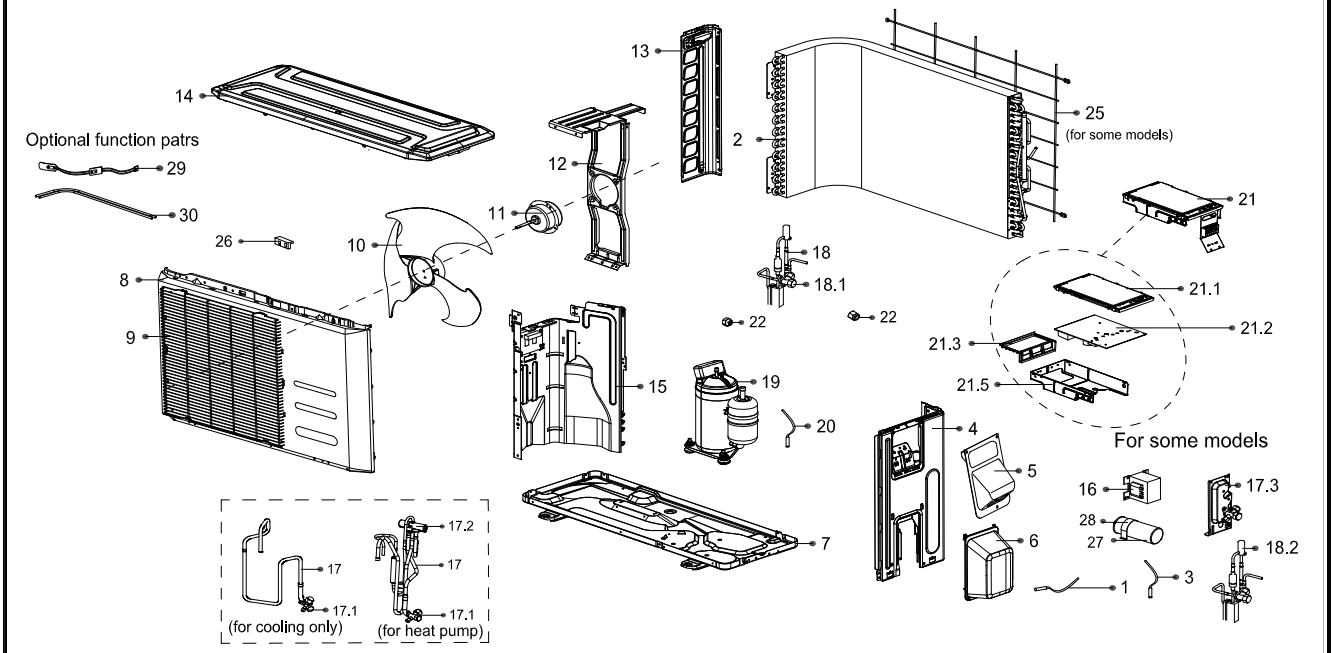

No.		Part Name	Quantity	BOM Code	BIN No.	Remark
1		Room Temperature Sensor	1.0	11201007000039	4	
2		Condenser assembly	1.0	15822000003520	515	
3		Temperature Sensor	1.0	11201007000136	5	
4		Right clapboard assembly	1.0	12222000005745	31	
5		Big handle	1.0	12222000005102	5	
6		Water Collecting Cover	1.0	12122000007150	5	
7		Chassis Assembly	1.0	12222000000576	74	
8		Front panel	1.0	12222000004463	99	
9		Air Outlet Guard	1.0	12222000001880	22	
10		Axial fan	1.0	12100105000051	33	
11		Brushless DC Motor	1.0	11002015000041	159	
12		Fan Motor Holder Subassembly	1.0	12222200001462	16	
13		Left supporter	1.0	12222000006504	11	
14		Top cover assembly	1.0	12222000002451	54	
15		Separation plate	1.0	12222000002226	25	
17		4-Ways valve assembly	1.0	15422000004933	206	
17.1		Low Pressure Valve	1.0	15500204000058	33	
17.2		4-way Valve	1.0	15500216000028	84	
17.3		Installing plate for valves	1.0	12222000002571	5	
18		High-Voltage valve Assembly	1.0	15422000004932	157	
18.1		Liquid valve	1.0	15500208000028	19	
18.2		Electric expansive valve assembly	1.0	15500213000047	186	
19		DC Inverter Rotary Compressor	1.0	11103020000479	760	
20		Discharge temperature sensor assembly	1.0	11201007000005	10	
21		Electronic control box assembly	1.0	17222000009468	670	
21.1		Electric Installing Box Cover	1.0	12222000001455	6	
21.2		Outdoor power board assembly	1.0	17122000018848	632	
21.3		Installation board for E-parts	1.0	12122000006913	7	
21.5		Electric Installing Box Subassembly	1.0	12222000001311	12	
22		Brass Nut	1.0	15500406000016	3	
22		Brass Nut	1.0	15500406000012	6	
25		Rear Net	1.0	12222000003622	21	
26		Clamp of front net	6.0	12122000006844	0	